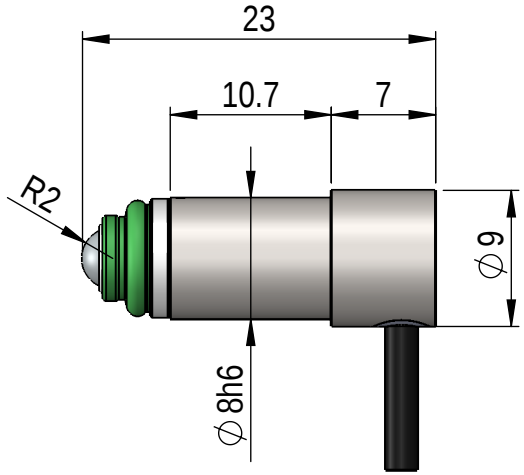

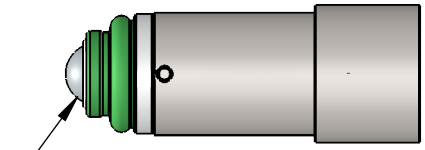

Tip not changeable
exchangeable ex factory after arrangement

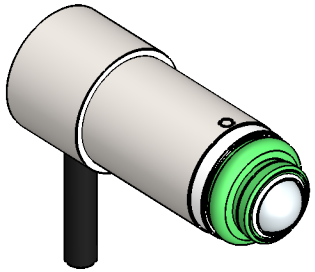

www.peterhirt.com

1000009

10P1

Massstab / Scale
2:1

mm