Stahlmessflª che gehª rtet
Steel measuring surface hardened

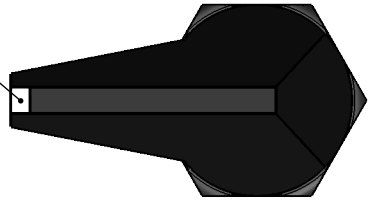

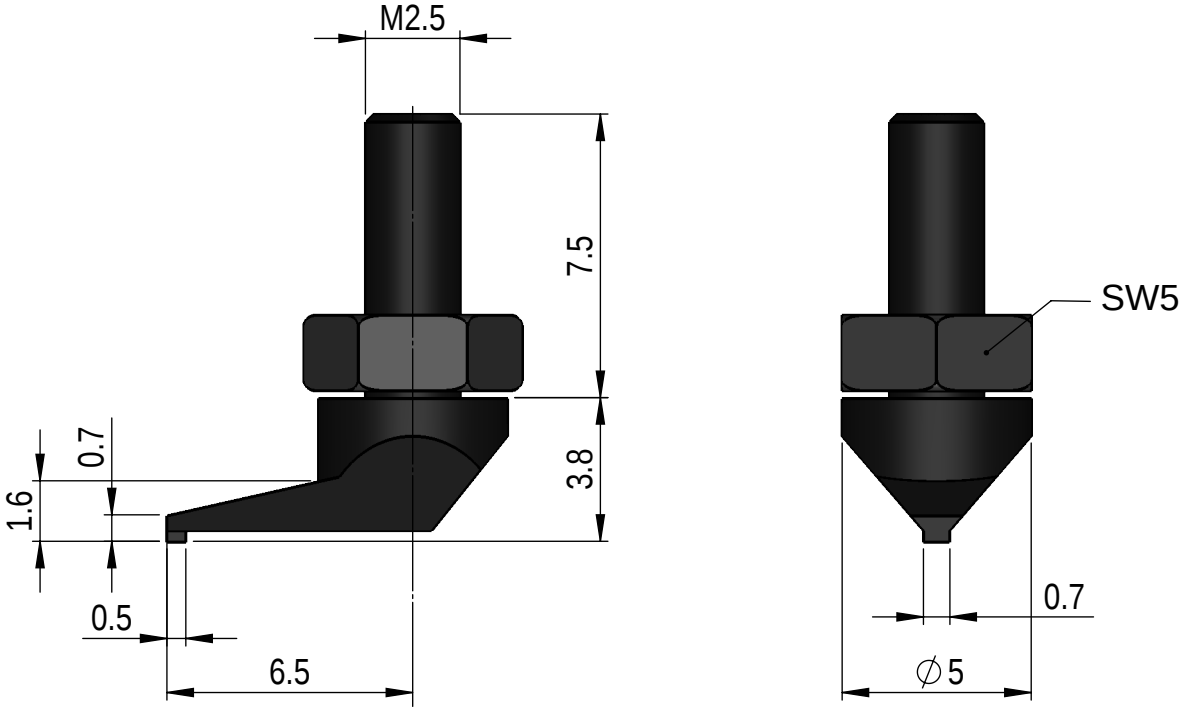

www.peterhirt.com

1002452

TN20

Massstab / Scale
5:1
mm